Diritti riservati All rights reserved

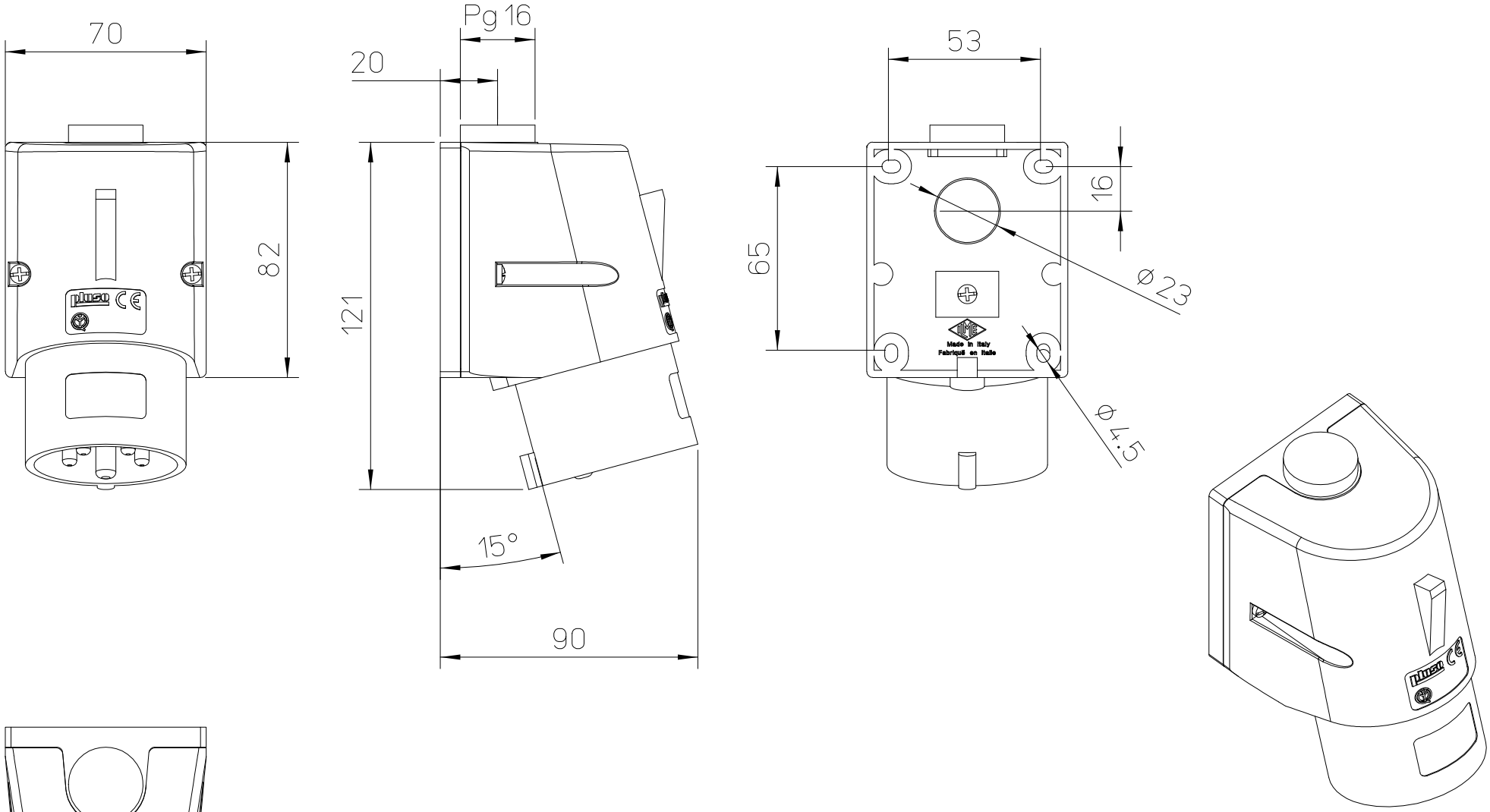

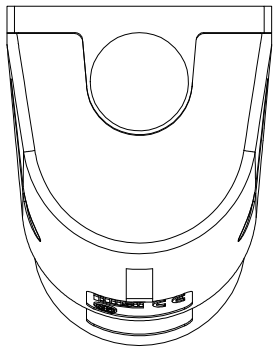

dimensions in mm	PE 16115 SM	Scale	
Date 17/05/17	surface mounting housings, plugs, 3 poles + N + PE, 16A	1:2	
Sign. C. Mainini			